Drill Press Safety

Requirements:

Proper eye protection must be worn - operate only with instructor's permission and after proper instructions have been received.

1. Obtain permission to use the Drill Press.

2. Always wear the appropriate eye protection.

3. Remove loose clothing; if sleeves are not rolled up above the elbow, button them at the cuff.

4. Check the speed of the machine and adjust if necessary.

5. Make all adjustments with the exception of the speed with the machine OFF.

6. Tighten the bit in the chuck and remove the key immediately.

7. Hold the work firmly; use clamps, a vise, or a jig for small irregular work.

8. Do not slow the drill press down by grabbing the rotating chuck when the machine is turned OFF. Not only will this cause static electricity but may also result in injury.

9. Insert round-shank drills in a three-jaw chuck.

10. "Rule of thumb" for drill speeds - small diameters: high speeds large diameters: low speeds

11. Keep all observers clear of your working area.

12. Keep the floor area in your working area clear of scraps of wood, etc. When finished using the wood lathe:

    a. turn off the power and wait until it comes to a complete stop,

    b. remove work piece,

    c. return tools to proper storage area and

    d. Clean up the work area. Use a table broom brush to clean off lathe when finished.

Using the Drill Press

A Layout location of the hole.

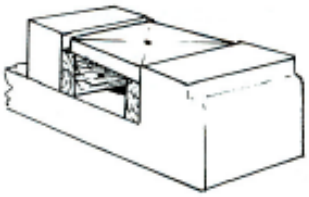

B If stock is small, use a table vise. Provide wood support underneath.

C CAUTION: Do not drill into vise or table top. Select speed.

Small diameter: High speeds
Large diameter: Slow speeds
(check speed chart)

NOTE: If stock is too large for vise, secure wood to table top with backing board and a C-clamp.

D Secure drill to chuck. Remove chuck key.

E After drill is secured in chuck, without turning machine on, spin the chuck by hand to make sure drill is in chuck straight.

For stopped holes, be sure to adjust the depth gauge.

F Get Instructor's permission.

G Wear EYE PROTECTION.

H Commence drilling. Apply uniform pressure. If drill smokes or other problems arise, call the Instructor.
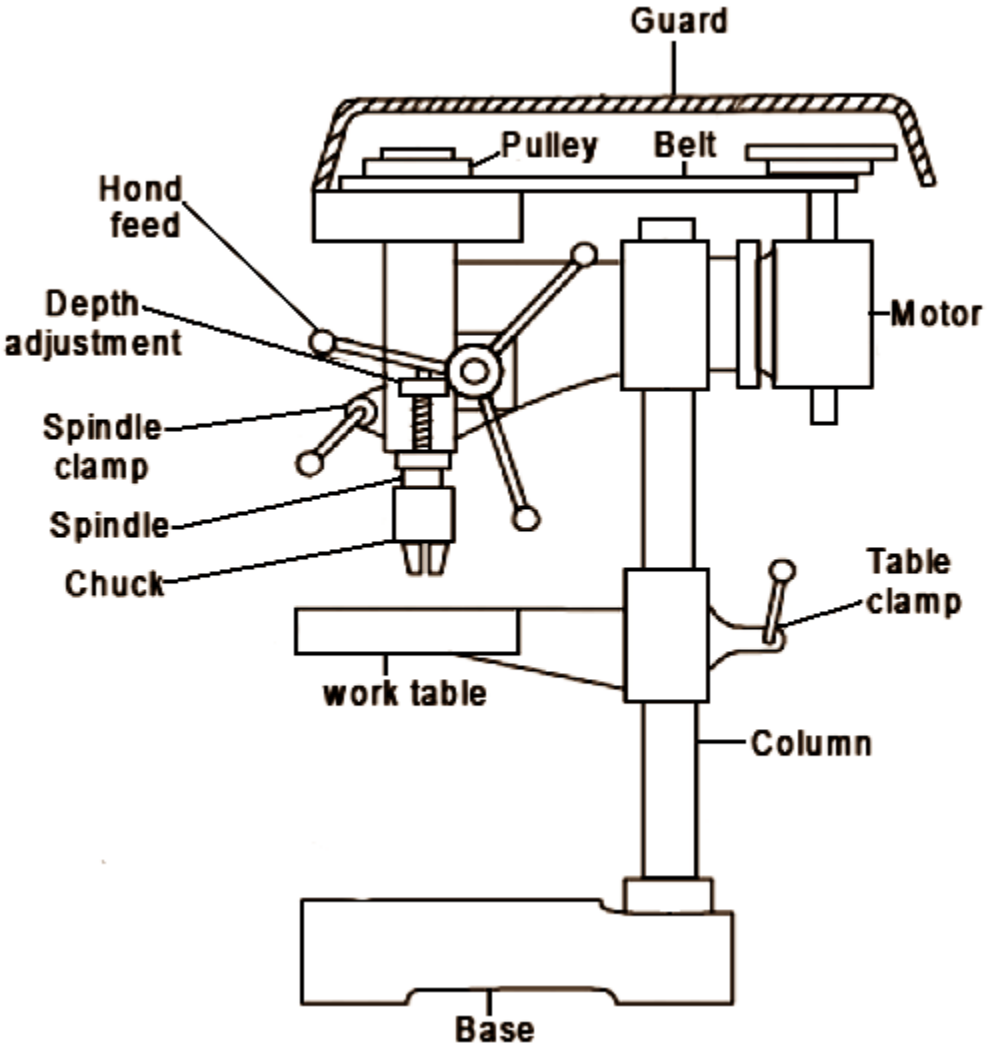
Parts of the Drill Press